| REVISIONS | | | | |
|---|---|---|---|---|
| ZONE | REV | DESCRIPTION | DATE | APPROVED |

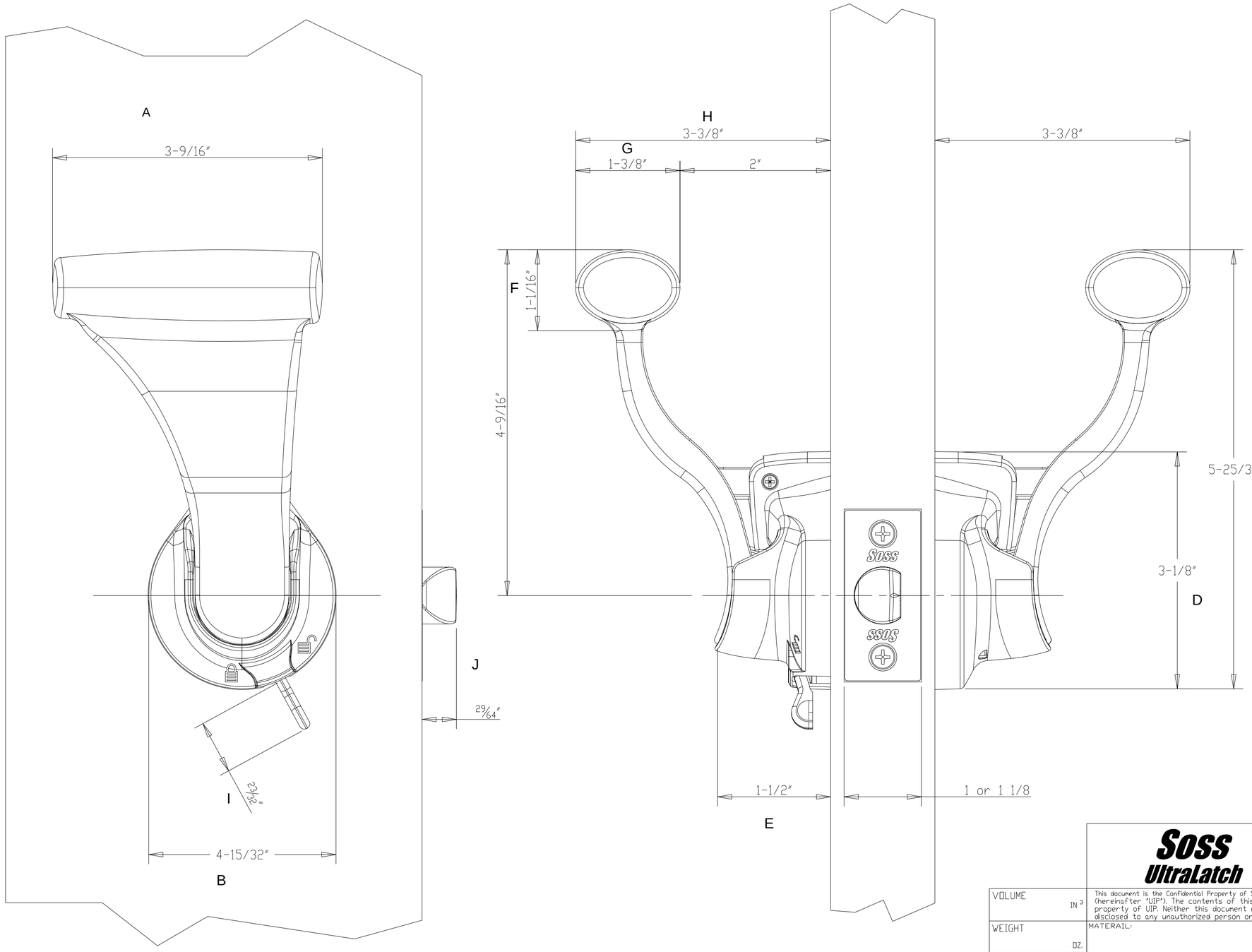


| AVAILABLE FINISHES |
|---|
| BRIGHT CHROME |
| SATIN CHROME |
| BRIGHT BRASS |
| SATIN BRASS |
| OIL RUBBED BRONZE |
| BLACK TEXTURED |
| BRIGHT NICKEL |
| BRIGHT STAINLESS |
| SATIN STAINLESS |
| SATIN NICKEL |
| |
| |

NOTE!
FOR DETAILS, CONTOURS, AND DIMENSIONS NOT SHOWN REFER TO 3D MODEL.

Soss UltraLatch

ONE COREWAY DRIVE
PIONEER, OHIO 43554

This document is the Confidential Property of Soss, a Universal Industrial Products, Inc. company (hereinafter "UIP"). The contents of this document are confidential and constitute proprietary property of UIP. Neither this document nor its contents shall be used, published, copied, or otherwise disclosed to any unauthorized person or entity without prior written consent from UIP.

| | | | |
|---|---|---|---|
| VOLUME IN 3 | MATERAIL: | DRAWN BY: | CHK BY: |
| WEIGHT OZ. | FINISH: | DATE DRAWN: | DATE CHK: |
| TOLERANCES UNLESS NOTED<br>1 PLS. = ±.015<br>2 PLS. = ±.010<br>3 PLS. = ±.005<br>FRACTION = ±1/64<br>ANGLES = ±1/2° | THIRD ANGLE PROJECTION<br>DO NOT SCALE DRAWING | PART NAME: | |
| | DWG SIZE: C / SCALE / SHEET: OF | PART NUMBER: | REV LEV |