ROLLER LATCH

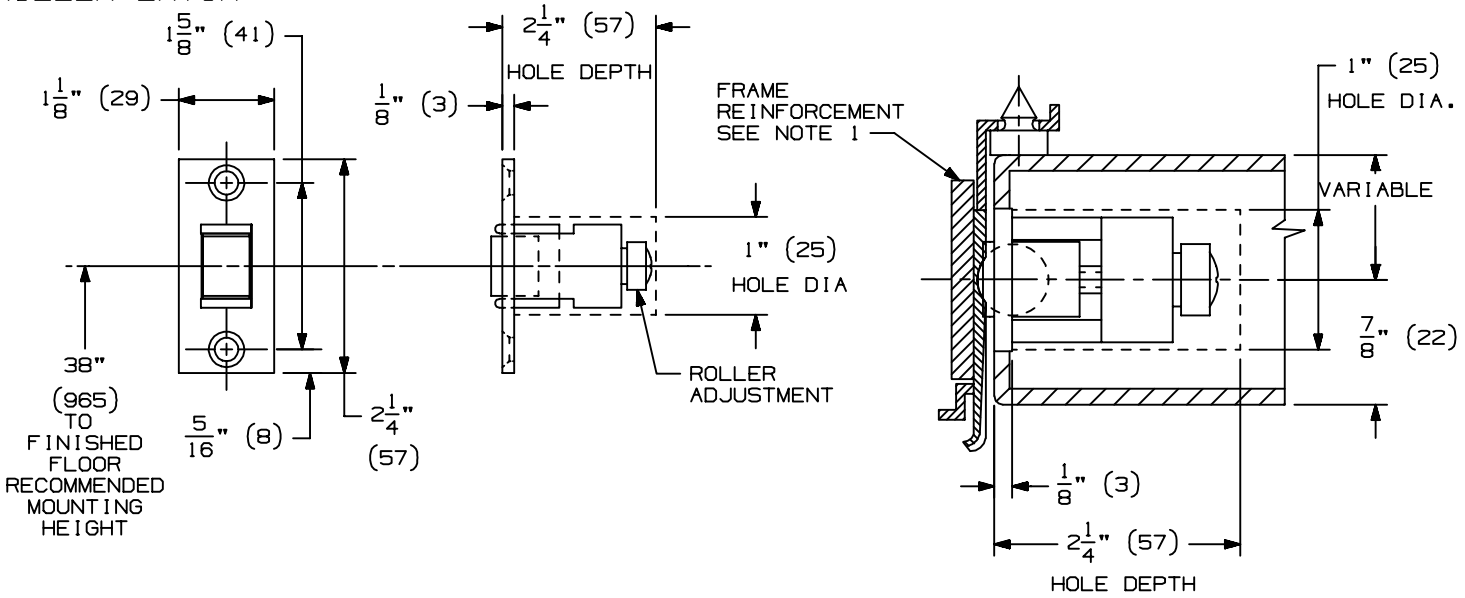

STRIKES

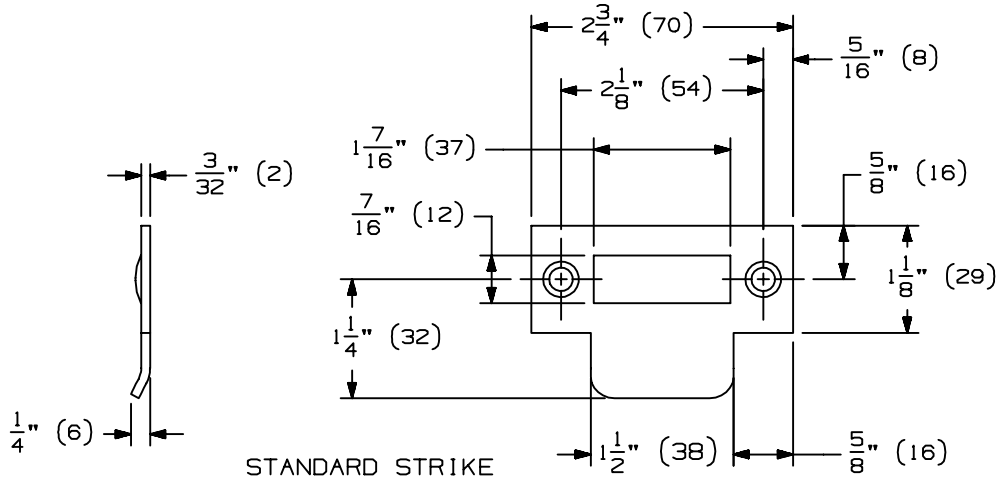

STANDARD STRIKE

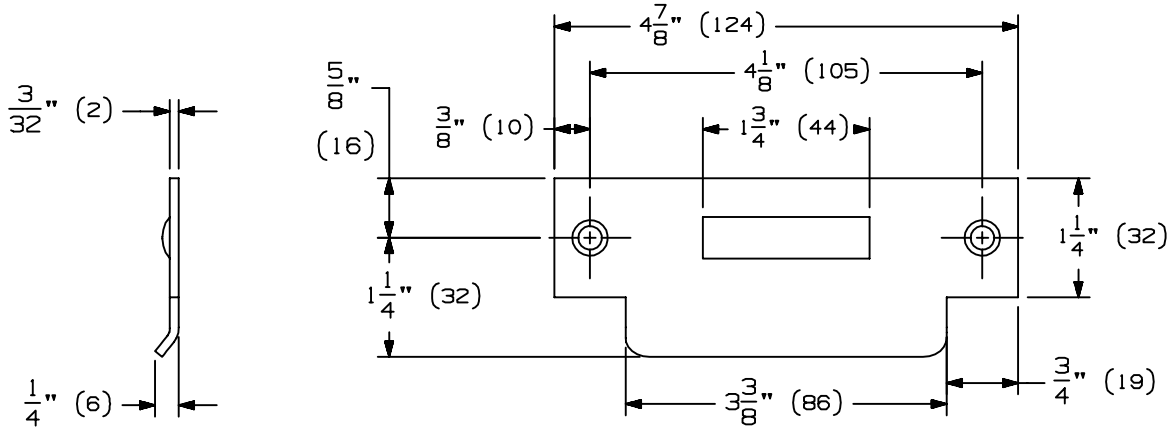

ASA STRIKE

	QTY	SCREW DETAIL
LATCH	2	8 X 1" FPHSMS
STANDARD STRIKE	2	8 X 1" FPHSMS
ASA STRIKE	2	12-24 X 1" FPHMS

NOTES:
1. HOLLOW METAL DOORS & FRAMES SHOULD BE PROPERLY REINFORCED WITH A 3/16" (5) MINIMUM THICKNESS PLATE.

IVES

RL32 ROLLER LATCH INSTALLATION TEMPLATE

IR Security & Safety®

NOTE: DIMENSIONS IN () ARE MILLIMETERS.

TEMPLATE NUMBER: INST.RL32_0

DATE: 09-01-01